KRAIS
Tube Expanders

6 Steps to RETUBING CONDENSERS

WATCH MOVIE ON YOUTUBE:
https://youtu.be/uGiikX8pl3k

KRAIS
Tube Expanders

Step 1
TUBE CUTTING

Proposed tool:
KRAIS MiniCut

WATCH MOVIE ON YOUTUBE:
https://youtu.be/uGiikX8pl3k

MiniCut 100 - Heat exchanger application

Bearbeitung von Elementen von Wärmeaustauschern
Cięcie rur w wymiennikach ciepła

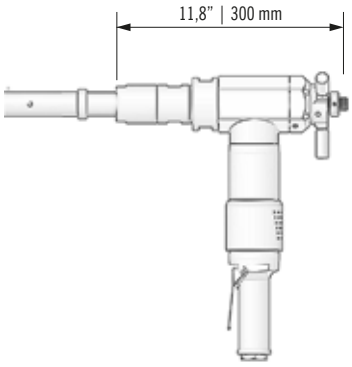

MiniCut 100 is recommended for use in cutting alloy and ferrous tubing up to 1-1/4" O.D. Heavy wall tubing up to 10 BWG can be cut quickly and efficiently. The MiniCut 100 tool is equipped with star wheel feed for smooth, positive power transmission to the cutting bit.

Der Einsatz der Maschinen vom Typ MiniCut 100 wird zum Schneiden von legierten oder gusseisernen Rohren mit einem Außendurchmesser von 2,5 – 3,2 cm empfohlen. Rohrwände bis zu 3,4 mm Stärke (10 BWG) können schnell und präzise geschnitten werden. Das Werkzeug MiniCut 100 ist mit einem Sternrad zur Steuerung des Vorschubs ausgestattet, was eine gleichmäßige Übertragung der Leistung auf die Schneiden garantiert.

Maszyna MiniCut 100 przeznaczona jest do cięcia i wycinania rur stopowych lub żelaznych. Urządzenie pozwala na szybkie wycinanie rur o średnicy zewnętrznej do 1-1/4" przy ściance o grubości do 10 BWG.
MiniCut 100 wyposażony jest w pokrętło gwiazdowe do sterowania systemem posuwu, pozwala to na płynną regulację mocy przenoszonej na nóż.

MAIN TECHNICAL DATA

Main unit	**MiniCut 100**	
Cutters	**Page G-17**	
Cutting range	Up to 1-1/4" OD	mm
Material	any	
Cutting method	one cutting bit	
Power	1,3 Hp	
Free speed	100 Rpm	
Torque	105 Ft.Lbs	140 Nm
Air consumption	55 cfm	1,3 m³/min
Width without head	2,32"	59 mm
Height	13,1"	335 mm
Weight	9 Lbs	4,5 kg

Optionally available with electric drive.

TECHNISCHE HAUPTDATEN

Zentraleinheit	**MiniCut 100**	
Schneidklingen	**Seite G-17**	
Schnittbereich	Bis 1-1/4" OD	mm
Material	beliebig	
Schneidmethode	eine Klinge	
Leistung	1,3 Hp	
Umdrehungsgeschwindigkeit	100 Rpm	
Drehmoment	105 Ft.Lbs	140 Nm
Druckluftverbrauch	55 cfm	1,3 m³/min
Breite ohne Schneidkopf	2,32"	59 mm
Höhe	13,1"	335 mm
Gewicht	9 Lbs	4,5 kg

Erhältlich auch mit Elektroantrieb.

DANE TECHNICZNE

Jednostka główna	**MiniCut 100**	
Ostrza tnące	**Strona G-17**	
Zasięg cięcia	do 1-1/4" OD	do 31,25 mm
Materiał	dowolny	
Metoda cięcia	jeden nóż	
Moc	1,3 Hp	
Prędkość obrotowa	100 Rpm	
Moment obrotowy	105 Ft.Lbs	140 Nm
Zużycie powietrza	55 cfm	1,3 m³/min
Szerokość bez głowicy	2,32"	59 mm
Wysokość	13,1"	335 mm
Masa	9 Lbs	4,5 kg

Dostępna jest także wersja z napędem elektrycznym.

KRAIS
Tube Expanders

Step 2
TUBE PULLING

Proposed tool:
KRAIS Tube Puller CP-1000

WATCH MOVIE ON YOUTUBE:
https://youtu.be/uGiikX8pl3k

Tube Puller CP-1000

Röhrenzieher CP-1000 | Wyciągacz do rur CP-1000

This unit has been designed to remove both ferrous and non-ferrous tubing from condensers, chillers and heat exchangers. Capacity from 5/8" to 1-1/2" O.D. gauge 16 to 24 (16 to 38 mm O.D. wall 0,5 to 1,6 mm) for tube sheets up to 2" (50 mm).

Dieses Set dient zur Beseitigung von Eisen- und Nichteisenrohren aus Kondensatoren, Kühlaggregaten und Wärmeaustauschern. Außendurchmesser der Rohre: von 16 mm (5/8") bis 38 mm (1-1/2"); Wandstärke: von 0,5 bis 1,6 mm. Stärke des Rohrbodens: bis 50 mm (2").

Ten model został zaprojektowany do wyciągania rur stalowych i nieżelaznych z kondensatorów, chłodnic i wymienników ciepła. Do rur 16 – 38 mm ze ścianką do 1,6 mm oraz ze ścianką do 0,5 mm z den sitowych o grubości do 50 mm bez rowków.

SPECIFICATIONS

Pulling force	15 T (150 kN)
Pulling Stroke	6" (160 mm)
Pulling speed	0,7"/sec (17 mm/sec)
Dimension	3,38" x 32,67" (86 x 830 mm)
Weight	32 Lbs (14,5 kg)

TECHNISCHE DATEN

Ziehkraft	15 T (150 kN)
Hub	6" (160 mm)
Ziehgeschwindigkeit	0,7"/sec (17 mm/sec)
Abmaße	3,38" x 32,67" (86 x 830 mm)
Gewicht	32 Lbs (14,5 kg)

DANE TECHNICZNE

Siła uciągu	15 T (150 kN)
Skok tłoka	6" (160 mm)
Szybkość wyciągania	0,7"/sec (17 mm/sec)
Wymiary	3,38" x 32,67" (86 x 830 mm)
Waga	32 Lbs (14,5 kg)

TUBE O.D. Z. Śr. Rury	TUBE GAUGE Grub. Ścian	GRIPPER SET Komplet szczęk	MIN ENTER DIM AFTER EXP. Min. Średnica	MAX ENTER DIM AFTER EXP. Maks. Średnica	DRAW MANDREL Cięgło	NOSE PIECE Kołnierz oporowy	LOCK NUT Nakrętka kontrująca	ADJUST NUT Nakrętka regulacyjna	JAW O'RING Pierścień do szczęk	C O'RING Pierścień podtrz.
5/8	16-17	CP-1000-01-58-16	12,85 mm (0,506")	13,85 mm (0,545")	CP-10L-03-58	CP-10L-06A-58	CP-10-LN-58	CP-10-AN-58	CP-2220	CP-1724
	18-19	CP-1000-01-58-18	13,60 mm (0,535")	14,60 mm (0,574")						
	20-21	CP-1000-01-58-20	14,30 mm (0,562")	15,30 mm (0,602")						
	22-23	CP-1000-01-58-22	14,60 mm (0,576")	15,65 mm (0,616")						
3/4	16-17	CP-1000-01-34-16	16,05 mm (0,631")	17,05 mm (0,671")	CP-10L-03-34	CP-10L-06A-34	CP-10-LN-34	CP-10-AN-34	CP-2220	CP-1724
	18-19	CP-1000-01-34-18	16,90 mm (0,665")	17,90 mm (0,704")						
	20-21	CP-1000-01-34-20	17,60 mm (0,692")	18,60 mm (0,732")						
	22-23	CP-1000-01-34-22	17,95 mm (0,706")	18,95 mm (0,746")						
7/8	16-17	CP-1000-01-78-16	19,20 mm (0,755")	20,20 mm (0,795")	CP-10L-03-78	CP-10L-06A-78	CP-10-LN-78	CP-10-AN-78	CP-2220	CP-1724
	18-19	CP-1000-01-78-18	20,00 mm (0,787")	21,00 mm (0,826")						
	20-21	CP-1000-01-78-20	20,70 mm (0,815")	21,70 mm (0,854")						
	22-23	CP-1000-01-78-22	21,05 mm (0,828")	22,05 mm (0,868")						
1	16-17	CP-1000-01-1-16	22,40 mm (0,881")	23,40 mm (0,921")	CP-10L-03-1	CP-10L-06A-1	CP-10-LN-1	CP-10-AN-1	CP-2220	CP-1724
	18-19	CP-1000-01-1-18	23,20 mm (0,913")	24,20 mm (0,952")						
	20-21	CP-1000-01-1-20	23,90 mm (0,941")	24,90 mm (0,980")						
	22-23	CP-1000-01-1-22	24,70 mm (0,972")	25,70 mm (1,011")						
1-1/4	16-17	CP-1000-01-114-16	28,80 mm (1,133")	29,80 mm (1,173")	CP-10L-03-114	CP-10L-06A-114	CP-10-LN-114	CP-10-AN-114	CP-2220	CP-1724
	18-19	CP-1000-01-114-18	29,60 mm (1,165")	30,60 mm (1,204")						
	20-21	CP-1000-01-114-20	30,35 mm (1,194")	31,35 mm (1,234")						
	22-23	CP-1000-01-114-22	30,70 mm (1,208")	31,70 mm (1,248")						
1-1/2	16-17	CP-1000-01-112-16	35,20 mm (1,385")	36,20 mm (1,425")	CP-10L-03-112	CP-10L-06A-112	CP-10-LN-112	CP-10-AN-112	CP-2220	CP-1724
	18-19	CP-1000-01-112-18	36,00 mm (1,417")	37,00 mm (1,456")						
	20-21	CP-1000-01-112-20	36,70 mm (1,444")	37,70 mm (1,484")						
	22-23	CP-1000-01-112-22	37,05 mm (1,458")	38,05 mm (1,498")						

See our CPSCK-1000 conversion kit for rapidly extract tubes or stubs. Up to 15 Ton Capacity!

KRAIS
Tube Expanders

Step 3
RAPID TUBE REMOVAL

Proposed tool:
KRAIS SpinAir

WATCH MOVIE ON YOUTUBE:
https://youtu.be/uGiikX8pl3k

KRAIS SpinAir

Pneumatic tube spinners is designed to remove and flatten non ferrous tubes from 5/8” to 1 ¼” OD. Can also be used to extract ferrous tubes from 5/8” to 1 ½” OD using special shaped rolls sized to fit each tube.

	PULLING SPEED	TORQUE	PULLING FORCE	AIR CON-SUMPTION	AIR PRESSURE	MAX MOTOR POWER
TUBE SPINAIR-12	12 m/min	1183 Nm	2,5 Ton	2 x 2300 l/min (2×75 cfm)	6,2 bar (90 psi)	2 x 3,0 Hp
TUBE SPINAIR-20	20 m/min	886 Nm	1,8 Ton	2 x 2300 l/min (2 x75 cfm)	6,2 bar (90 psi)	2 x 3,0 Hp
TUBE SPINAIR-40	40 m/min	960 Nm	1,95 Ton	2 x 2800 l/min (2 x 95 cfm)	6,2 bar (90 psi)	2 x 3,5 Hp

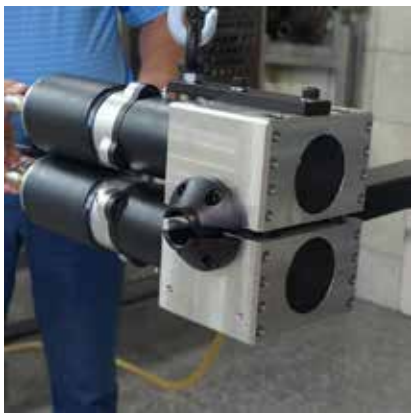

KRAIS
Tube Expanders

Step 4
STUBS REMOVAL

Proposed tool:
KRAIS Tube Puller CP-1000

WATCH MOVIE ON YOUTUBE:
https://youtu.be/uGiikX8pl3k

Tube Puller CP-1000

Röhrenzieher CP-1000 | Wyciągacz do rur CP-1000

This unit has been designed to remove both ferrous and non-ferrous tubing from condensers, chillers and heat exchangers. Capacity from 5/8" to 1-1/2" O.D. gauge 16 to 24 (16 to 38 mm O.D. wall 0,5 to 1,6 mm) for tube sheets up to 2" (50 mm).

Dieses Set dient zur Beseitigung von Eisen- und Nichteisenrohren aus Kondensatoren, Kühlaggregaten und Wärmeaustauschern. Außendurchmesser der Rohre: von 16 mm (5/8") bis 38 mm (1-1/2"); Wandstärke: von 0,5 bis 1,6 mm. Stärke des Rohrbodens: bis 50 mm (2").

Ten model został zaprojektowany do wyciągania rur stalowych i nieżelaznych z kondensatorów, chłodnic i wymienników ciepła. Do rur 16 – 38 mm ze ścianką do 1,6 mm oraz ze ścianką do 0,5 mm z den sitowych o grubości do 50 mm bez rowków.

SPECIFICATIONS

Pulling force	15 T (150 kN)
Pulling Stroke	6" (160 mm)
Pulling speed	0,7"/sec (17 mm/sec)
Dimension	3,38" x 32,67" (86 x 830 mm)
Weight	32 Lbs (14,5 kg)

TECHNISCHE DATEN

Ziehkraft	15 T (150 kN)
Hub	6" (160 mm)
Ziehgeschwindigkeit	0,7"/sec (17 mm/sec)
Abmaße	3,38" x 32,67" (86 x 830 mm)
Gewicht	32 Lbs (14,5 kg)

DANE TECHNICZNE

Siła uciągu	15 T (150 kN)
Skok tłoka	6" (160 mm)
Szybkość wyciągania	0,7"/sec (17 mm/sec)
Wymiary	3,38" x 32,67" (86 x 830 mm)
Waga	32 Lbs (14,5 kg)

TUBE O.D. Z. Śr. Rury	TUBE GAUGE Grub. Ścian	GRIPPER SET Komplet szczęk	MIN ENTER DIM AFTER EXP. Min. Średnica	MAX ENTER DIM AFTER EXP. Maks. Średnica	DRAW MANDREL Cięgło	NOSE PIECE Kołnierz oporowy	LOCK NUT Nakrętka kontrująca	ADJUST NUT Nakrętka regulacyjna	JAW O'RING Pierścień do szczęk	C O'RING Pierścień podtrz.
5/8	16-17	CP-1000-01-58-16	12,85 mm (0,506")	13,85 mm (0,545")	CP-10L-03-58	CP-10L-06A-58	CP-10-LN-58	CP-10-AN-58	CP-2220	CP-1724
	18-19	CP-1000-01-58-18	13,60 mm (0,535")	14,60 mm (0,574")						
	20-21	CP-1000-01-58-20	14,30 mm (0,562")	15,30 mm (0,602")						
	22-23	CP-1000-01-58-22	14,60 mm (0,576")	15,65 mm (0,616")						
3/4	16-17	CP-1000-01-34-16	16,05 mm (0,631")	17,05 mm (0,671")	CP-10L-03-34	CP-10L-06A-34	CP-10-LN-34	CP-10-AN-34	CP-2220	CP-1724
	18-19	CP-1000-01-34-18	16,90 mm (0,665")	17,90 mm (0,704")						
	20-21	CP-1000-01-34-20	17,60 mm (0,692")	18,60 mm (0,732")						
	22-23	CP-1000-01-34-22	17,95 mm (0,706")	18,95 mm (0,746")						
7/8	16-17	CP-1000-01-78-16	19,20 mm (0,755")	20,20 mm (0,795")	CP-10L-03-78	CP-10L-06A-78	CP-10-LN-78	CP-10-AN-78	CP-2220	CP-1724
	18-19	CP-1000-01-78-18	20,00 mm (0,787")	21,00 mm (0,826")						
	20-21	CP-1000-01-78-20	20,70 mm (0,815")	21,70 mm (0,854")						
	22-23	CP-1000-01-78-22	21,05 mm (0,828")	22,05 mm (0,868")						
1	16-17	CP-1000-01-1-16	22,40 mm (0,881")	23,40 mm (0,921")	CP-10L-03-1	CP-10L-06A-1	CP-10-LN-1	CP-10-AN-1	CP-2220	CP-1724
	18-19	CP-1000-01-1-18	23,20 mm (0,913")	24,20 mm (0,952")						
	20-21	CP-1000-01-1-20	23,90 mm (0,941")	24,90 mm (0,980")						
	22-23	CP-1000-01-1-22	24,70 mm (0,972")	25,70 mm (1,011")						
1-1/4	16-17	CP-1000-01-114-16	28,80 mm (1,133")	29,80 mm (1,173")	CP-10L-03-114	CP-10L-06A-114	CP-10-LN-114	CP-10-AN-114	CP-2220	CP-1724
	18-19	CP-1000-01-114-18	29,60 mm (1,165")	30,60 mm (1,204")						
	20-21	CP-1000-01-114-20	30,35 mm (1,194")	31,35 mm (1,234")						
	22-23	CP-1000-01-114-22	30,70 mm (1,208")	31,70 mm (1,248")						
1-1/2	16-17	CP-1000-01-112-16	35,20 mm (1,385")	36,20 mm (1,425")	CP-10L-03-112	CP-10L-06A-112	CP-10-LN-112	CP-10-AN-112	CP-2220	CP-1724
	18-19	CP-1000-01-112-18	36,00 mm (1,417")	37,00 mm (1,456")						
	20-21	CP-1000-01-112-20	36,70 mm (1,444")	37,70 mm (1,484")						
	22-23	CP-1000-01-112-22	37,05 mm (1,458")	38,05 mm (1,498")						

See our CPSCK-1000 conversion kit for rapidly extract tubes or stubs. Up to 15 Ton Capacity!

KRAIS
Tube Expanders

Step 5
TUBE ROLLING

Proposed tools:
KRAIS TES Mini 2 with Motor
KRAIS Push&Pull K50

WATCH MOVIE ON YOUTUBE:
https://youtu.be/uGiikX8pl3k

TES Mini 2 Highlights

Our TES Mini 2 is a semi automatic torque controller for the precise expansion of ferrous, non-ferrous and alloy tubing. It is ideal for Condenser/Chillers, Heat Exchangers and Boilers. It's one of our most popular tools because of its accuracy, speed and ease of use.

The second generation TES Mini has been designed with direct input from our customers and utilizes the latest electronic components. As a direct result of these new technologies, gains in precision and energy efficiency have been realized from an already accurate system (±1%). The redesigned control panel is simpler to navigate and incorporates a built in card reader for detailed work reports.

Main TES Mini 2 features:

- microprocessor controlled tube expansion;
- consistent torque control over 1 or 10,000 expansions;
- controls torque during long series of tube expanding;
- programmable torque shut-off value and high/low torque limits;
- reverse button for retracting expanders from the tubes;
- programmable timers for; cycle start, reverse pause, end of cycle, and a suppression timer for low torque value settings;
- CE Certified design.

Usage of our TES Mini 2 Controller, which is durable and easy to maintain, ensures that all tubes are expanded to the same torque. With the proper, easy to use set up, you can avoid over rolling which damages joint integrity and the distortion of tube sheet ligaments.

TES Mini 2 functions:

- speed adjustment or limit (depends on motor type)
- torque adjustment
- suppression time adjustments
- pause time adjustmenst
- softstart delay
- report generation (up to 3000 cycles)
- works with 110 V and 230 V

KRAIS Tube Expanders the manufacturer of the equipment have the right to any changes on parameters and configuration without notice

TES Mini 2 Motors

TES Mini in conjunction with one of our tube rolling motors will improve productivity and safety, while delivering unmatched performance and durability.

		WEIGHT		MOTOR POWER	FREE SPEED	MAX RPM UNDER LOAD	TORQUE				TUBE CAPACITY*	
							[NM]		[FT-LBS]			
		[KG]	[LBS]				MIN	MAX	MIN	MAX	MIN	MAX
	HT-0	1,2	2,4	460 W	2300	1700	0,70	10,00	0,50	7,40	1/4	1/2
	ES-0	3,2	7,0	1150 W	680	450	12,00	45,00	8,85	33,00	5/8	1 1/4
	ES-2	3,2	7,0	1150 W	650 1200	430 760	8,00	43,00	6,00	32,00	5/8	1 1/8
	DU-0	2,0	4,4	650 W	628 2100	450 1550	3,00	42,00	2,21	30,50	5/8	1
	DU-1	8,6	17,6	2000 W	150 250 445 720	120 219 380 650	12,00	250,00	8,85	185,00	3/4	2
	K90-E-90	10,0	22,0	1150 W	90	81	70,00	510,00	51,63	376,16	2	5
	K90-E-190	10,0	22,0	1150 W	142	129	50,00	260,00	36,88	191,77	1 1/2	3
	K90-E-280	10,0	22,0	1150 W	274	250	40,00	190,00	29,50	140,14	1 1/4	2 1/2

** Tube Capacisty depends on material and technical condition of tube*

Push&Pull K50 Pneumatic Rolling Motor

Pneumatischer Aufweitemotor Push&PULL K50-600 | Napęd pneumatyczny do rozwalcowywania rur

Our New Model PUSH&PULL K50-600 Pneumatic Rolling Motor has been specifically engineered to ensure uniform tube to tube sheet expansions, thereby preventing the under and over rolling of tubes. This pneumatic tool features an aluminum body, weighing in at only 10.5 lbs (4.76 Kgs) with an ergonomically correct push/pull Throttle. Automatically Stops Tube expansion at defined settings.

Wir präsentieren unsere neusten Druckluftgeräte zum Rohraufweiten in Wärmeaustauscher, Kondensatoren, Kühler und anderen Rohranlagen. Die Antriebe vom Typ K50 sind spezialisierte Geräte zum präzisen Aufweiten von Rohren in Siebböden. Durch die Prüfung der Aufweitung vermeiden wir die Unter- sowie die Überwalzung, was in beiden Fällen Undichtheiten verursacht. Der Stützring ist aus Aluminium gefertigt, wodurch das Gerät nur 4,76 kg wiegt. Nachdem das richtige Drehmoment erreicht worden ist, schaltet die Maschine automatisch ab.

Prezentujemy nasze najnowsze napędy pneumatyczne z serii K50 do rozwalcowywania rur w wymienikach ciepła, kondensatorach, chłodnicach i inych urządzenich rurowych. Poprzez kontrolę siły pracy urządzenia unikamy zarówno niedowalcownia jak i przewalcowania, powodujących nieszczelności. Obudowa wykonana jest z aluminium dzięki czemu urządzenie waży tylko 4,76 kg. Po osiągnięciu właściewgo momentu skręcającego maszyna wyłącza sie automatycznie.

	FREE SPEED Freie drehzahl Wolne obroty	MINIMUM TORQUE Min. Kraft Min. Siła		MAXIMUM TORQUE Max. Kraft Max. Siła		WEIGHT Gewicht Waga		LENGTH Länge Długość		AIR CONSUMPTION Luftverbrauch Zużycie powietrza		TUBE CAPACITY O.D. Max. Rohr durchmesser Max średnica rury		SQUARE SIZE mitne-hmermaß kwadrat	CHUCKS OPT Opt handgriff Opcj. Uchwyt	
K50-1250	1250 rpm	1,58 Nm	14 in.Lbs	12,2 Nm	108 in.Lbs	4,76 kg	10,5 Lbs	311 mm	12 1/4"	1700 l/min	60 cfm	3/4"	19 mm	3/8"	3/8"	opt. 1/2"
K50-600	485 rpm	2,49 Nm	22 in.Lbs	21,81 Nm	193 in.Lbs	4,76 kg	10,5 Lbs	311 mm	12 1/4"	1700 l/min	60 cfm	1"	25,4 mm	3/8"	3/8"	opt. 1/2"
K50-400	400 rpm	5,00 Nm	44,15 in.Lbs	36,00 Nm	318 in.Lbs	4,76 kg	10,5 Lbs	311 mm	12 1/4"	1700 l/min	60 cfm	1 1/4"	31,7 mm	3/8"	3/8"	opt. 1/2"

KRAIS
Tube Expanders

Step 6
TUBE FACING

Proposed tools:
KRAIS MiniMill 300LP
KRAIS Auto MiniMill 300P
KRAIS 1WTTC

WATCH MOVIE ON YOUTUBE:
https://youtu.be/uGiikX8pl3k

MiniMill 300LP

The fastest and strongest facing machine on the market. Engineered for safety and ease of use, featuring a pneumatic locking system with a double piston cylinder. Compact milling head with double cutting edge inserts with 6% cobalt. For all types of material including: ferrous, non-ferrous, stainless and exotic alloys steel, duplex, inconel and titanium.

The fast locking and the handle feed make this system very efficient for heat exchanger manufacturers.

	APPLICATION RANGE	STD. LOCKING RANGE	FREE SPEED	POWER	TORQUE	FEED STROKE
MiniMill 300LP	12,5 – 38,0 mm	12,5 – 23,0 mm	300 Rpm	1,3 Hp	43 Nm	20 mm
	0,492 – 1,500”	0,492 – 0,900”			32 Ft.Lbs	0,787”
Recommended for	Tube facing and trimming ▪ Seal weld removal					

Air consumption:	55 CFM	1,3 m³/min	Body width:	2,32”	59 mm	Body height:	13,1”	335 mm	Body weight:	15,43 Lbs	7 kg

LEVER FEED LM

A heavy duty feed handle ideal for heavy wall tube and pipe bevelling. Also well suited for strength and seal weld removal applications.

MINI SHAFT

A system with 3 interchangeable guide shafts 12.4, 13.9 and 16.9 mm. A complete jaw set to cover 12.5 to 23 mm (0.492” to 0.905”) inside diameter.

JAWS FOR MINI SHAFT, PAGE F-48

SHAFT 20

Shaft with jaw sets to cover 20 to 74 mm (0.787” to 2.914”) inside diameter.

JAWS FOR SHAFT 20, PAGE F-47

SHAFT 22

Shaft with increased cross sectional diameter within the jaw retaining section. Enhances machining rigidity.

JAWS FOR SHAFT 22, PAGE F-47

STAR FEED SM

The most universal feed system that is suitable for facing, bevelling, seal and strength weld removal.

STWRMH

Custom designed head dedicated for strength weld removal. Heads are sized per tube diameter and are precisely engineered so the inserts cannot damage the shaft or locking jaws. Simple, error free set up, make these heads very advantageous.

TABLE FOR STWRMH, PAGE F-42

MMFH

A tube facing milling head suitable for machining tubes manufactured from very hard materials such as duplex, inconel and other exotic alloys. Utilizes 4-sided carbide inserts.

TABLE FOR MMFH, PAGE F-42

TFMH

A tube facing milling head for facing tubes made of any type of material. Utilizes 6% cobalt inserts.

TABLE FOR TFMH, PAGE F-43

SPEED REDUCER

An optional speed reducer can be used for seal and strength weld removal applications including duplex, super duplex and other hard to machine alloys.

EXAMPLE TOOL APPLICATION

A real application where a customer is shortening a bundle. MiniMill can deal with this task quickly and efficiently.

Double sided inserts and fixed diameter heads ensure unsurpassed efficiency and quality. Mechanical stops ensure identical tube projection.

Auto MiniMill P

Auto MiniMill P is a fully automatic machine, controlled by a built-in, fully pneumatic control box, with adjustable feed rate and actuated by a hand button (foot switch optional). Ideal for repetitive work cycles on condensers and heat exchangers, as well as for bevelling and facing boiler tubes (100 Rpm configuration). AutoMiniMIll P is specially designed for trimming and weld removal. This tool is based on the MiniMill 300; it is a fast facing and end preparation lathe designed for various tubes including stainless and other high chromium alloys. It works with all MiniMill 300 compatible cutter heads.

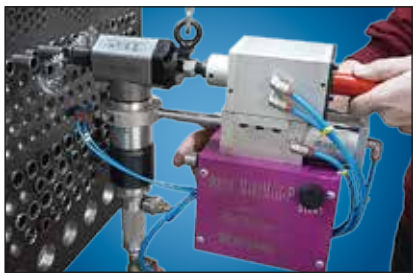

	APPLICATION RANGE	STD. LOCKING RANGE	FREE SPEED	POWER	TORQUE	FEED STROKE
Auto MiniMill 300P	12,5 – 38,1 mm	12,5 – 23,0 mm	300 Rpm	1,3 Hp	43 Nm	20 mm
	0,492 – 1,500”	0,492 – 0,906 ”			32 Ft.Lbs	0,787”
Recommended for	Tube facing ▪ Tube bevelling					

Air consumption:	55 CFM	1,3 m³/min	Body width:	2,32”	59 mm	Body height:	13,1”	335 mm	Body weight:	25 Lbs	11,5 kg

	APPLICATION RANGE	STD. LOCKING RANGE	FREE SPEED	POWER	TORQUE	FEED STROKE
Auto MiniMill 100P	20,0 – 63,5 mm	12,0 – 58,0 mm	100 Rpm	1,3 Hp	140 Nm	20 mm
	0,787 – 2,500”	0,472 – 2,283 ”			105 Ft.Lbs	0,787”
Recommended for	Tube facing ▪ Tube bevelling					

Air consumption:	55 CFM	1,3 m³/min	Body width:	2,32”	59 mm	Body height:	13,1”	335 mm	Body weight:	25 Lbs	11,5 kg

1WTTC-1000 Wheel Type Tube Cutter

1WTTC-1000 Maschine mit ein Schneidscheiben | Wycinak 1WTTC-1000

Trimming attachment
Tube projection can be cut quickly without generating any chips!

The 1WTTC-1000 greatly reduces cutting time by utilizing the special 1 point self-centering cutter wheel design and works with 3/4", thru 1-1/4" O.D. tubes (after changing cutter body wheels and pilots). **The tool does not create any chips during the cutting process!**

Dank eines speziellen selbstzentrierenden Schneiderads garantiert die Schneidmaschine 1WTTC-1000 eine deutlich kürzere Schneidezeit. Sie findet Anwendung bei Rohren mit einem Durchmesser von 19,05 mm bis 31,75 mm (nach dem Austausch der Schneidkörperräder). **Dieses Werkzeug erzeugt keine Stahlspäne beim Schneiden!**

Wycinak KRAIS 1WTTC-1000 dzięki konstrukcji opartej na jednej, samocentrującej się rolce tnącej skraca czas wycinania rur, wielokrotnie przewyższając tradycyjne wycinaki. Stosowany jest do rur o średnicy zewnętrznej od 19,05 mm do 31,75 mm. **Narzędzie nie generuje wiórów podczas wycinania!**

TUBE OD		TUBE GAUGE			TOOL NR	WHEEL HOLDER	WHEEL PIN	CUTTING			TRIMMING			BODY
[inch]	[mm]	[bwg]	[inch]	[mm]				CUTTER WHEEL	PILOT	THRUST COLLAR	TRIMMING COLLAR	PILOT	PILOT EXTENSION	
3/4	19,5	14	0,083	2,11	1WTTC-750	1CCWH-190	CP-20	CW-21	P-008	SWTC-750	WTTA-750	T-8	PE-1WTTC-190	1WTB-750
		15	0,072	1,83				CW-21	P-009			T-9		
		16	0,065	1,65				CW-21	P-010			T-10		
		17	0,058	1,47				CW-21	P-011			T-11		
		18	0,049	1,24		1CCWH-19-2		CW-21	P-012			T-12		
		19	0,042	1,07				CW-21	P-013			T-13		
		20	0,035	0,89				CW-21	P-014			T-14		
		21	0,032	0,81				CW-21	P-015			T-15		
		22	0,028	0,71				CW-21	P-016			T-16		
		23	0,025	0,63				CW-21	P-017			T-17		
		24	0,022	0.56				CW-31	P-018			T-18		

TUBE OD		TUBE GAUGE			TOOL NR	WHEEL HOLDER	WHEEL PIN	CUTTING			TRIMMING			BODY
[inch]	[mm]	[bwg]	[inch]	[mm]				CUTTER WHEEL	PILOT	THRUST COLLAR	TRIMMING COLLAR	PILOT	PILOT EXTENSION	
7/8	22.23	14	0,083	2,11	1WTTC-875	1CCWH-222	CP-25	CW-25	P-019	SWTC-875	WTTA-875	T-19	PE-1WTTC-222	1WTB-875
		15	0,072	1,83				CW-25	P-020			T-20		
		16	0,065	1,65				CW-25	P-021			T-21		
		17	0,058	1,47				CW-25	P-022			T-22		
		18	0,049	1,24		1CCWH-222-2		CW-25	P-023			T-23		
		19	0,042	1,07				CW-25	P-024			T-24		
		20	0,035	0,89				CW-25	P-025			T-25		
		21	0,032	0,81				CW-25	P-026			T-26		
		22	0,028	0,71				CW-25	P-027			T-27		
		23	0,025	0,63				CW-25	P-028			T-28		
1	25.40	12	0,109	2,77	1WTTC-1000	1CCWH-254	CP-25	CW-31	P-029-1	SWTC-1000	WTTA-1000	T-29-1	PE-1WTTC-254	1WTB-1000
		13	0,095	2,41				CW-31	P-029-2			T-29-2		
		14	0,083	2,11				CW-31	P-029			T-29		
		15	0,072	1,83				CW-31	P-030			T-30		
		16	0,065	1,65				CW-31	P-031			T-31		
		17	0,058	1,47				CW-31	P-032			T-32		
		18	0,049	1,24		1CCWH-254-2		CW-31	P-033			T-33		
		19	0,042	1,07				CW-31	P-034			T-34		
		20	0,035	0,89				CW-31	P-035			T-35		
		21	0,032	0,81				CW-31	P-036			T-36		
		22	0,028	0,71				CW-31	P-037			T-37		
		23	0,025	0,63				CW-31	P-038			T-38		
		24	0,022	0.56				CW-31	P-039			T-39		
1 1/8	28.58	12	0,109	2,77	1WTTC-1125	1CCWH-286	CP-30	CW-34	P-040-1	SWTC-1125	WTTA-1125	T-40-1	PE-1WTTC-286	1WTB-1125
		13	0,095	2,41				CW-34	P-040-2			T-40-2		
		14	0,083	2,11				CW-34	P-040			T-40		
		15	0,072	1,83				CW-34	P-041			T-41		
		16	0,065	1,65				CW-34	P-042			T-42		
		17	0,058	1,47				CW-34	P-043			T-43		
		18	0,049	1,24		1CCWH-286-2		CW-34	P-044			T-44		
		19	0,042	1,07				CW-34	P-045			T-45		
		20	0,035	0,89				CW-34	P-046			T-46		
		21	0,032	0,81				CW-34	P-047			T-47		
		22	0,028	0,71				CW-34	P-048			T-48		
		23	0,025	0,63				CW-34	P-049			T-49		
		24	0,022	0.56				CW-34	P-050			T-50		
1 1/4	31.75	12	0,109	2,77	1WTTC-1250	1CCWH-317	CP-30	CW-37	P-051	SWTC-1250	WTTA-1250	T-51	PE-1WTTC-317	1WTB-1250
		13	0,095	2,41				CW-37	P-052			T-52		
		14	0,083	2,11				CW-37	P-053			T-53		
		15	0,072	1,83				CW-37	P-054			T-54		
		16	0,065	1,65				CW-37	P-055			T-55		
		17	0,058	1,47				CW-37	P-056			T-56		
		18	0,049	1,24		1CCWH-317-2		CW-37	P-057			T-57		
		19	0,042	1,07				CW-37	P-058			T-58		
		20	0,035	0,89				CW-37	P-059			T-59		
		21	0,032	0,81				CW-37	P-060			T-60		
		22	0,028	0,71				CW-37	P-061			T-61		
		23	0,025	0,63				CW-37	P-062			T-62		
		24	0,022	0.56				CW-37	P-063			T-63		

TUBE OD		TUBE GAUGE			TOOL NR	WHEEL HOLDER	WHEEL PIN	CUTTING			TRIMMING			BODY
[inch]	[mm]	[bwg]	[inch]	[mm]				CUTTER WHEEL	PILOT	THRUST COLLAR	TRIMMING COLLAR	PILOT	PILOT EXTENSION	
1 1/2		10	0,134	3,4	1WTTC-1500	1CCWH-381	CP-30	CW-41	P-064	SWTC-1500	WTTA-1500	T-64	PE-1WTTC-381	1WBT-1500
		11	0,12	3				CW-41	P-065			T-65		
		12	0,109	2,77				CW-41	P-066			T-66		
		13	0,095	2,41				CW-41	P-067			T-67		
		14	0,083	2,11				CW-41	P-068			T-68		
		15	0,072	1,83				CW-41	P-069			T-69		
		16	0,065	1,65		1CCWH-383		CW-41	P-070			T-70		
		17	0,058	1,47				CW-41	P-071			T-71		
		18	0,049	1,24				CW-41	P-072			T-72		
		19	0,042	1,07				CW-41	P-073			T-73		
		20	0,035	0,89				CW-41	P-074			T-74		
		21	0,032	0,81				CW-41	P-075			T-75		
		22	0,028	0,71				CW-41	P-076			T-76		
		23	0,025	0,63				CW-41	P-077			T-77		
		24	0,022	0.56				CW-41	P-078			T-78		
1 3/4		8	0,165	4,2	1WTTC-1750	1CCWH-444	CP-30	CW-45	P-079	SWTC-1750	WTTA-1750	T-79	PE-1WTTC-444	1WBT-1750
		9	0,148	3,8				CW-45	P-080			T-80		
		10	0,134	3,4				CW-45	P-081			T-81		
		11	0,12	3				CW-45	P-082			T-82		
		12	0,109	2,77				CW-45	P-083			T-83		
		13	0,095	2,41				CW-45	P-084			T-84		
		14	0,083	2,11				CW-45	P-085			T-85		
		15	0,072	1,83				CW-45	P-086			T-86		
		16	0,065	1,65		1CCWH-445		CW-45	P-087			T-87		
		17	0,058	1,47				CW-45	P-088			T-88		
		18	0,049	1,24				CW-45	P-089			T-89		
		19	0,042	1,07				CW-45	P-090			T-90		
		20	0,035	0,89				CW-45	P-091			T-91		
2	50,8	6	0,203	5,2	1WTTC-2000	1CCWH-508	CP-30	CW-51	P-092	SWTC-2000	WTTA-2000	T-92	PE-1WTTC-508	1WBT-2000
		7	0,18	4,6				CW-51	P-093			T-93		
		8	0,165	4,2				CW-51	P-094			T-94		
		9	0,148	3,8				CW-51	P-095			T-95		
		10	0,134	3,4				CW-51	P-096			T-96		
		11	0,12	3				CW-51	P-097			T-97		
		12	0,109	2,77		1CCWH-506		CW-51	P-098			T-98		
		13	0,095	2,41				CW-51	P-099			T-99		
		14	0,083	2,11				CW-51	P-100			T-100		
		15	0,072	1,83				CW-51	P-101			T-101		
		16	0,065	1,65		1CCWH-504		CW-51	P-102			T-102		
		17	0,058	1,47				CW-51	P-103			T-103		
		18	0,049	1,24				CW-51	P-104			T-104		
		19	0,042	1,07				CW-51	P-105			T-105		
		20	0,035	0,89				CW-51	P-106			T-106		
2 1/4	57,1	6	0,203	5,2	1WTTC-2000	1CCWH-571	CP-30	CW-51	P-107	SWTC-2250	WTTA-2250	T-107	PE-1WTTC-508	1WBT-2000
		7	0,18	4,6				CW-51	P-108			T-108		
		8	0,165	4,2				CW-51	P-109			T-109		
		9	0,148	3,8				CW-51	P-110			T-110		
		10	0,134	3,4				CW-51	P-111			T-111		
		11	0,12	3				CW-51	P-112			T-112		
		12	0,109	2,77		1CCWH-573		CW-51	P-113			T-113		
		13	0,095	2,41				CW-51	P-114			T-114		
		14	0,083	2,11				CW-51	P-115			T-115		
		15	0,072	1,83				CW-51	P-116			T-116		
		16	0,065	1,65		1CCWH-575		CW-51	P-117			T-117		
		17	0,058	1,47				CW-51	P-118			T-118		
		18	0,049	1,24				CW-51	P-119			T-119		
		19	0,042	1,07				CW-51	P-120			T-120		
		20	0,035	0,89				CW-51	P-121			T-121		

TUBE OD		TUBE GAUGE			TOOL NR	WHEEL HOLDER	WHEEL PIN	CUTTING			TRIMMING			BODY
[inch]	[mm]	[bwg]	[inch]	[mm]				CUTTER WHEEL	PILOT	THRUST COLLAR	TRIMMING COLLAR	PILOT	PILOT EXTENSION	
2,5	63,5	6	0,203	5,2	1WTTC-2000	1CCWH-635	CP-30	CW-51	P-122	SWTC-2500	WTTA-2500	T-122	PE-1WTTC-508	1WBT-2000
		7	0,18	4,6				CW-51	P-123			T-123		
		8	0,165	4,2				CW-51	P-124			T-124		
		9	0,148	3,8				CW-51	P-125			T-125		
		10	0,134	3,4				CW-51	P-126			T-126		
		11	0,12	3				CW-51	P-127			T-127		
		12	0,109	2,77		1CCWH-637		CW-51	P-128			T-128		
		13	0,095	2,41				CW-51	P-129			T-129		
		14	0,083	2,11				CW-51	P-130			T-130		
		15	0,072	1,83				CW-51	P-131			T-131		
		16	0,065	1,65		1CCWH-639		CW-51	P-132			T-132		
		17	0,058	1,47				CW-51	P-133			T-133		
		18	0,049	1,24				CW-51	P-134			T-134		
		19	0,042	1,07				CW-51	P-135			T-135		
		20	0,035	0,89				CW-51	P-136			T-136		
3	76,2	6	0,203	5,2	1WTTC-2000	1CCWH-762	CP-30	CW-51	P-137	SWTC-3000	WTTA-3000	T-137	PE-1WTTC-508	1WBT-2000
		7	0,18	4,6				CW-51	P-138			T-138		
		8	0,165	4,2				CW-51	P-139			T-139		
		9	0,148	3,8				CW-51	P-140			T-140		
		10	0,134	3,4				CW-51	P-141			T-141		
		11	0,12	3				CW-51	P-142			T-142		
		12	0,109	2,77		1CCWH-764		CW-51	P-143			T-143		
		13	0,095	2,41				CW-51	P-144			T-144		
		14	0,083	2,11				CW-51	P-145			T-145		
		15	0,072	1,83				CW-51	P-146			T-146		
		16	0,065	1,65		1CCWH-766		CW-51	P-147			T-147		
		17	0,058	1,47				CW-51	P-148			T-148		
		18	0,049	1,24				CW-51	P-149			T-149		
		19	0,042	1,07				CW-51	P-150			T-150		
		20	0,035	0,89				CW-51	P-151			T-151		
4	101,6	6	0,203	5,2	1WTTC-2000	1CCWH-101	CP-30	CW-51	P-152	SWTC-4000	WTTA-4000	T-152	PE-1WTTC-508	1WBT-2000
		7	0,18	4,6				CW-51	P-153			T-153		
		8	0,165	4,2				CW-51	P-154			T-154		
		9	0,148	3,8				CW-51	P-155			T-155		
		10	0,134	3,4				CW-51	P-156			T-156		
		11	0,12	3				CW-51	P-157			T-157		
		12	0,109	2,77		1CCWH-103		CW-51	P-158			T-158		
		13	0,095	2,41				CW-51	P-159			T-159		
		14	0,083	2,11				CW-51	P-160			T-160		
		15	0,072	1,83				CW-51	P-161			T-161		
		16	0,065	1,65		1CCWH-105		CW-51	P-162			T-162		
		17	0,058	1,47				CW-51	P-163			T-163		
		18	0,049	1,24				CW-51	P-164			T-164		
		19	0,042	1,07				CW-51	P-165			T-165		
		20	0,035	0,89				CW-51	P-166			T-166		